Algebra 2
Trig Review for Test

Name: KEY

Date: _____ **Per:** _____

Find a reference angle for each of the following:

1.) 150°

$\theta' = 30°$

2.) −405°

$\theta' = 45°$

3.) 240°

$\theta' = 60°$

4.) −660°

$\theta' = 60°$

5.) 300°

$\theta' = 60°$

6.) −225°

$\theta' = 45°$

7.) 390°

$\theta' = 30°$

8.) 210

$\theta' = 30°$

Sketch the angle below; state one positive and one negative co-terminal angle; and find the reference angle.

9.) 405°

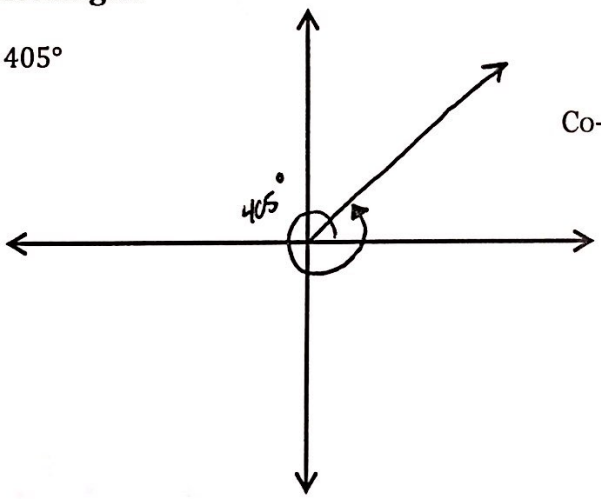

Co-terminal angles: 765° and −315°

Reference angle: 45°

10.) −225°

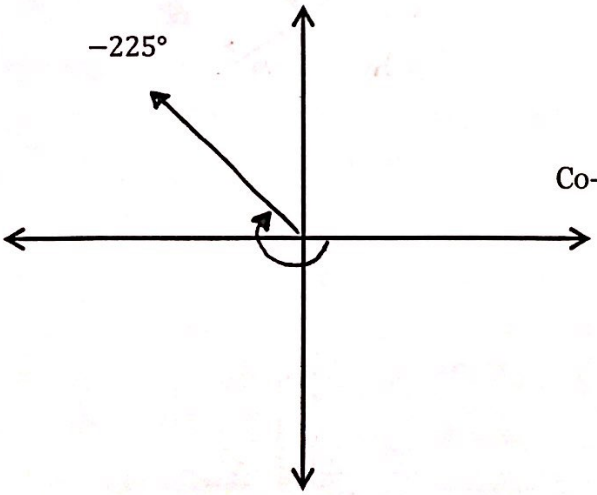

Co-terminal angles: 135° and −585°

Reference angle: 45°

Scanned by CamScanner

11.) 330°

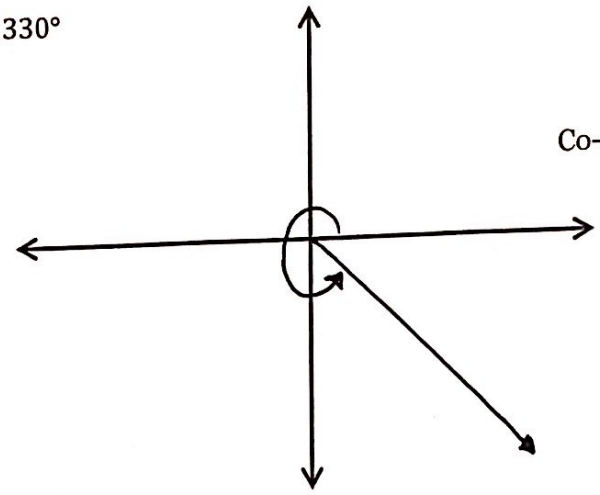

Co-terminal angles: 390° and −30°

Reference angle: 30°

12.) −315°

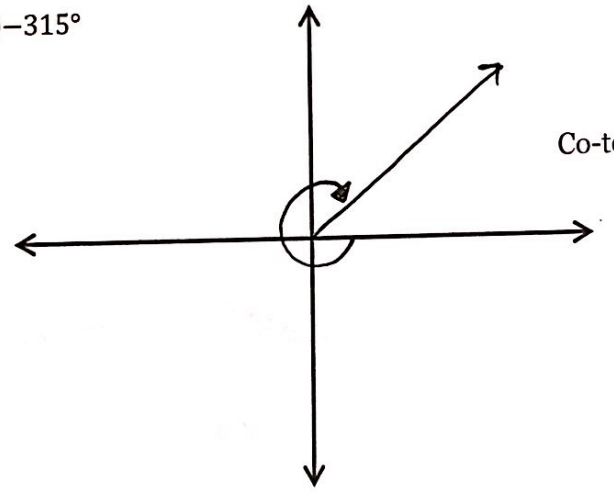

Co-terminal angles: 45° and −675°

Reference angle: 45°

Find the exact values of all six trig functions given the following.

13.) (−8, −15)

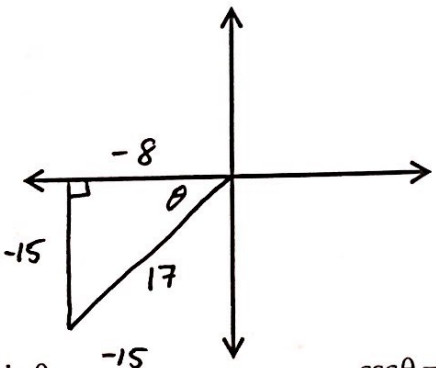

$\sin\theta = \frac{-15}{17}$ $\csc\theta = \frac{17}{-15}$

$\cos\theta = \frac{-8}{17}$ $\sec\theta = \frac{17}{-8}$

$\tan\theta = \frac{-15}{-8} = \frac{15}{8}$ $\cot\theta = \frac{8}{15}$

14.) 150°

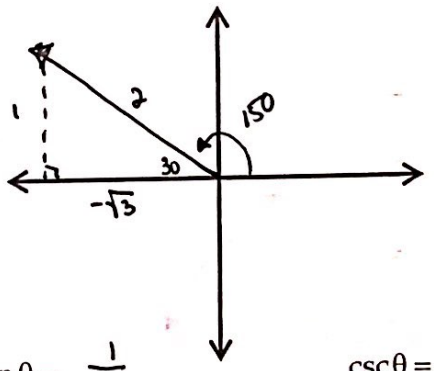

$\sin\theta = \frac{1}{2}$ $\csc\theta = 2$

$\cos\theta = \frac{-\sqrt{3}}{2}$ $\sec\theta = -\frac{2}{\sqrt{3}} = \frac{-2\sqrt{3}}{3}$

$\tan\theta = \frac{1}{-\sqrt{3}} = -\frac{\sqrt{3}}{3}$ $\cot\theta = -\sqrt{3}$

Scanned by CamScanner

15.) In the unit circles, what are the coordinates of *the point shown*?

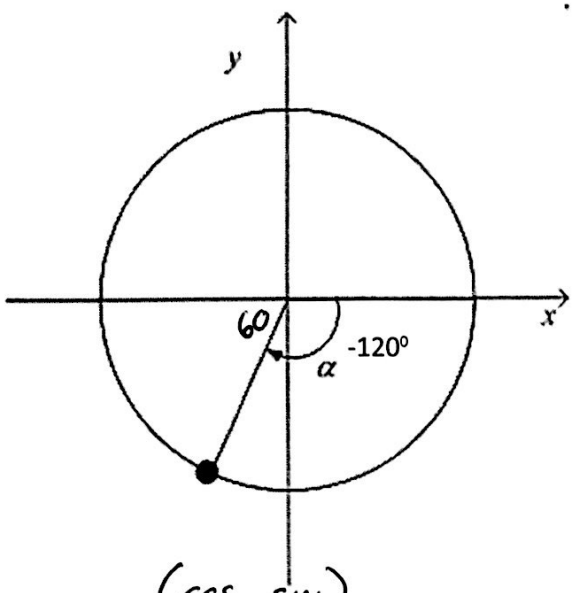

(cos, sin)

$\left(\frac{-1}{2}, \frac{-\sqrt{3}}{2}\right)$

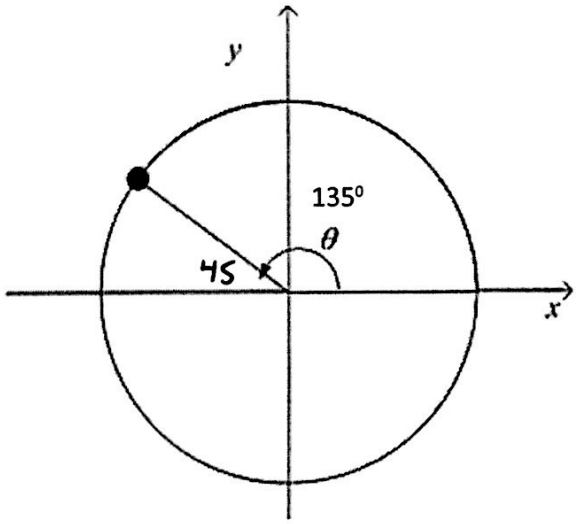

$\left(\frac{-\sqrt{2}}{2}, \frac{\sqrt{2}}{2}\right)$

16.) State the measure of an angle with the same reference angle of 60° in...

Q1: 60° Q2: 120° Q3: 240° Q4: 300°

17.) Given the following graphs, state the key information.

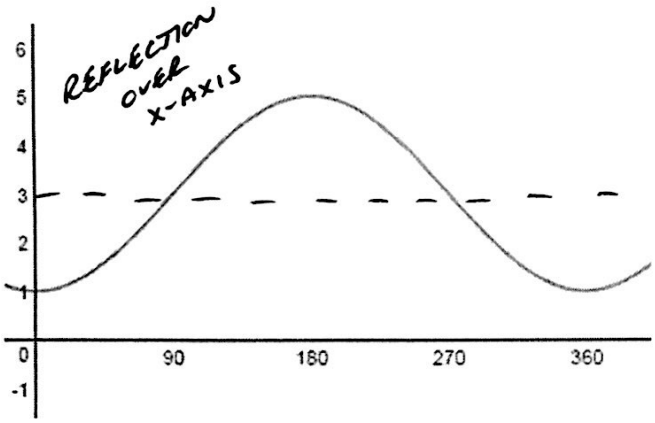

Curve: sin / cos (circle one)

Amplitude: 2

Period: 360°

Vertical Shift: DOWN 1

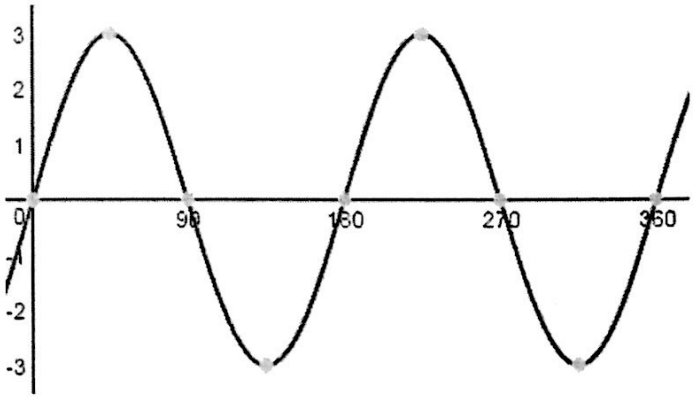

Curve: sin / cos (circle one)

Amplitude: 3

Period: 180

Vertical Shift: —

Scanned by CamScanner

18.) Write the equation of a sine curve given an amplitude of 3, vertical shift up 2, and period length 180°

$y = 3 \sin 2x + 2$

$\frac{360}{B} = \text{PERIOD}$

$\frac{360}{B} = 180$

$360 = 180B$

$2 = B$

19.) Write the equation of a cosine curve given an amplitude of 5, a reflection across the x-axis, vertical shift down 5, and period length of 720°.

$y = -5 \cos \frac{1}{2}x - 5$

$\frac{360}{B} = \text{PERIOD}$

$\frac{360}{B} = 720$

$360 = 720B$

$\frac{1}{2} = B$

20.) Write the equation of a cosine curve given an amplitude of 7, a vertical shift up 4, and period length of 360°.

$y = 7 \cos x + 4$

21.) Write the equation of a sine curve given an amplitude of 6, a reflection across the x-axis, vertical shift down 3, and period length of 540°.

$y = -6 \sin \frac{2}{3}x - 3$

$\frac{360}{B} = 540$

$360 = 540B$

Scanned by CamScanner