Algebra II
13.3 Coordinate Trigonometric Functions

Name KEY
Date _____ Period _____

Trigonometric Functions According to Quadrants (*BOW TIE*)

Quadrant II (-x, y)

$\sin\theta = \frac{y}{R}$

$\cos\theta = \frac{-x}{R}$

$\tan\theta = \frac{y}{-x}$

Quadrant I (x, y)

$\sin\theta = \frac{y}{R}$

$\cos\theta = \frac{x}{R}$

$\tan\theta = \frac{y}{x}$

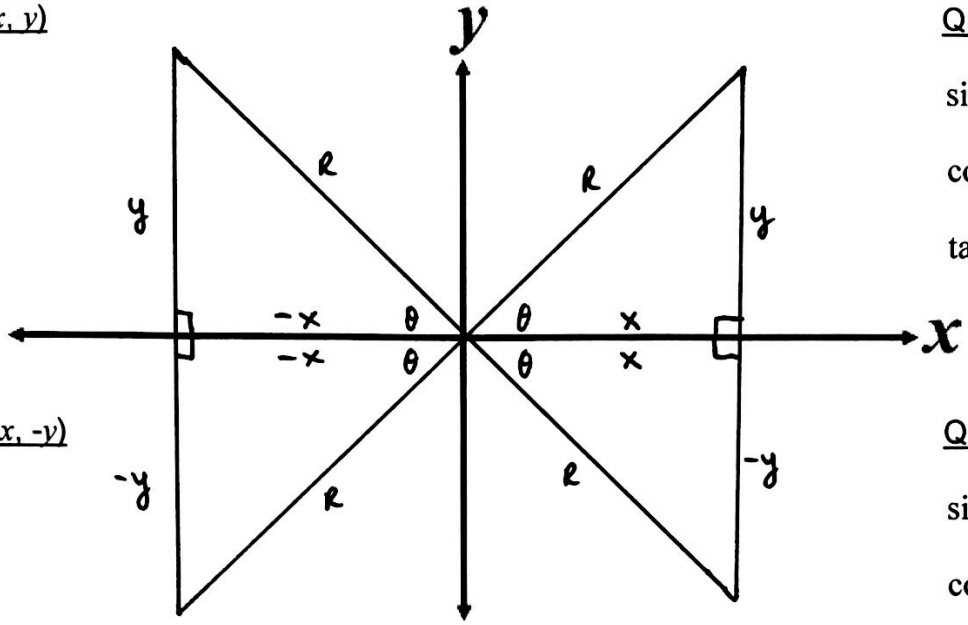

Quadrant III (-x, -y)

$\sin\theta = \frac{-y}{R}$

$\cos\theta = \frac{-x}{R}$

$\tan\theta = \frac{-y}{-x} = \frac{y}{x}$

Quadrant IV (x, -y)

$\sin\theta = \frac{-y}{R}$

$\cos\theta = \frac{x}{R}$

$\tan\theta = \frac{-y}{x}$

Charge of Trigonometric Functions According to Quadrants

Quadrant II

sin +
cos −
tan −

Quadrant I

sin +
cos +
tan +

Quadrant III

sin −
cos −
tan +

Quadrant IV

sin −
cos +
tan −

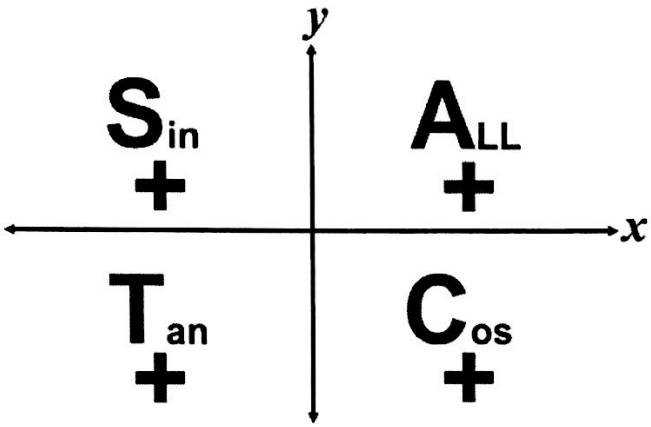

All **S**tudents **T**ake **C**lasses

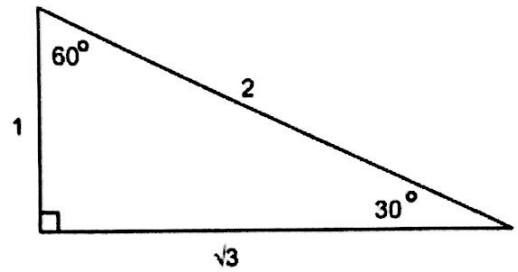

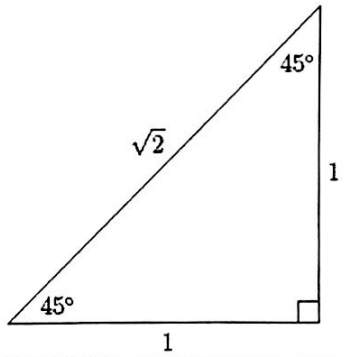

Find the values of the six, simplified trigonometric functions of angle ϑ.

1.) $\theta = 150°$

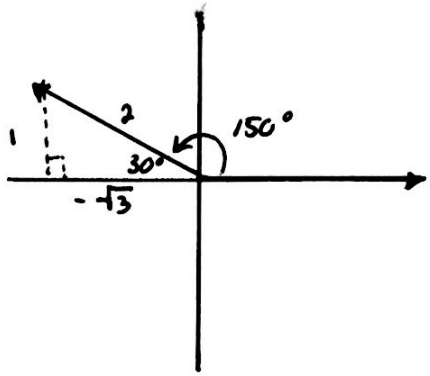

$sin\vartheta =$ $1/2$ $csc\vartheta =$ 2

$cos\vartheta =$ $-\sqrt{3}/2$ $sec\vartheta =$ $2/-\sqrt{3} = -\frac{2\sqrt{3}}{3}$

$tan\vartheta =$ $1/-\sqrt{3} = -\frac{\sqrt{3}}{3}$ $cot\vartheta =$ $-\sqrt{3}/1 = -\sqrt{3}$

2.) $\theta = 225°$

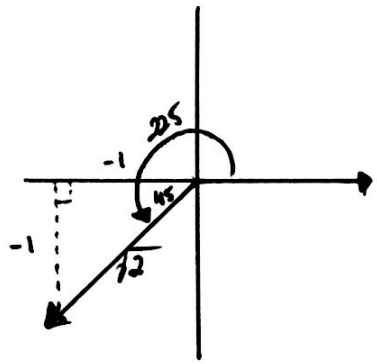

$sin\vartheta =$ $-1/\sqrt{2} = -\sqrt{2}/2$ $csc\vartheta =$ $\sqrt{2}/-1 = -\sqrt{2}$

$cos\vartheta =$ $-1/\sqrt{2} = -\sqrt{2}/2$ $sec\vartheta =$ $\sqrt{2}/-1 = -\sqrt{2}$

$tan\vartheta =$ 1 $cot\vartheta =$ 1

3.) $\theta = 300°$

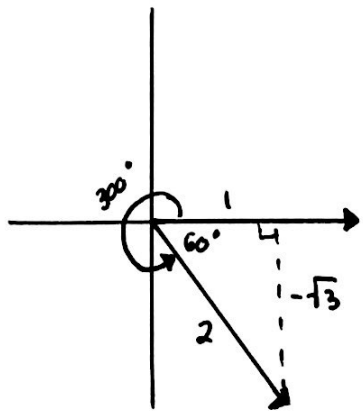

$sin\vartheta =$ $-\sqrt{3}/2$ $csc\vartheta =$ $2/-\sqrt{3} = -2\sqrt{3}/3$

$cos\vartheta =$ $1/2$ $sec\vartheta =$ $2/1 = 2$

$tan\vartheta =$ $-\sqrt{3}/1$ $cot\vartheta =$ $1/-\sqrt{3} = -\sqrt{3}/3$

Finding Function Values of Coordinates

Given point (x, y), use the Pythagorean Theorem $\left(x^2 + y^2 = r^2\right)$ to figure out the value of *r*.

Find the values of the six, simplified trigonometric functions of angle ϑ.

4.) Point $(1, \sqrt{15})$

$(1)^2 + (\sqrt{15})^2 = r^2$

$1 + 15 = r^2$

$16 = r^2$

$4 = r$

$\sin\vartheta = \frac{\sqrt{15}}{4}$ $\csc\vartheta = \frac{4}{\sqrt{15}} = \frac{4\sqrt{15}}{15}$

$\cos\vartheta = \frac{1}{4}$ $\sec\vartheta = 4$

$\tan\vartheta = \frac{\sqrt{15}}{1} = \sqrt{15}$ $\cot\vartheta = \frac{1}{\sqrt{15}} = \frac{\sqrt{15}}{15}$

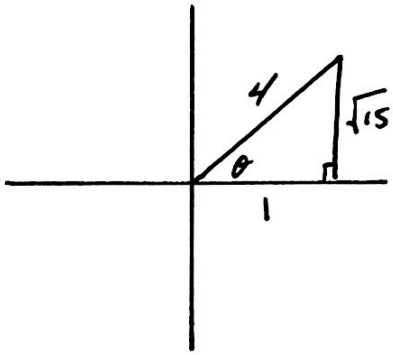

5.) Point (20, −48)

$(20)^2 + (-48)^2 = r^2$

$400 + 2304 = r^2$

$2704 = r^2$

$r = 52$

$\sin\vartheta = \frac{-48}{52} = \frac{-12}{13}$ $\csc\vartheta = \frac{13}{-12}$

$\cos\vartheta = \frac{20}{52} = \frac{5}{13}$ $\sec\vartheta = \frac{13}{5}$

$\tan\vartheta = \frac{-48}{20} = \frac{-12}{5}$ $\cot\vartheta = \frac{5}{-12}$

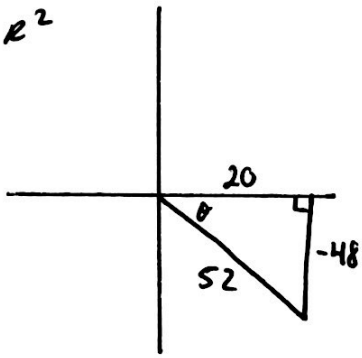

6.) Point $(3, \sqrt{7})$

$(3)^2 + (\sqrt{7})^2 = r^2$

$9 + 7 = r^2$

$16 = r^2$

$4 = r$

$\sin\vartheta = \frac{\sqrt{7}}{4}$ $\csc\vartheta = \frac{4}{\sqrt{7}} = \frac{4\sqrt{7}}{7}$

$\cos\vartheta = \frac{3}{4}$ $\sec\vartheta = \frac{4}{3}$

$\tan\vartheta = \frac{\sqrt{7}}{3}$ $\cot\vartheta = \frac{3}{\sqrt{7}} = \frac{3\sqrt{7}}{7}$

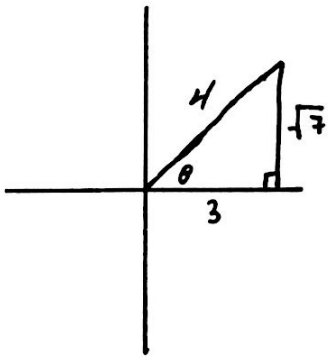

Find the values of the six, simplified trigonometric functions of angle ϑ.

7.) $\sin\vartheta = \frac{\sqrt{5}}{7}$, with ϑ in quadrant I.

$(x)^2 + (\sqrt{5})^2 = (7)^2$

$x^2 + 5 = 49$

$x^2 = 44$

$x = \sqrt{44}$

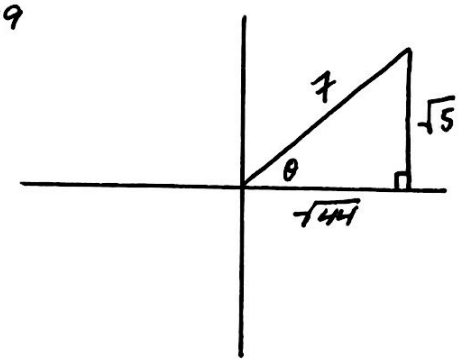

$sin\vartheta =$ $\sqrt{5}/7$ $\quad$ $csc\vartheta =$ $7/\sqrt{5}$

$cos\vartheta =$ $\sqrt{44}/7$ $\quad$ $sec\vartheta =$ $7/\sqrt{44}$

$tan\vartheta =$ $\sqrt{5}/\sqrt{44}$ $\quad$ $cot\vartheta =$ $\sqrt{44}/\sqrt{5}$

8.) $\tan\vartheta = -\frac{15}{8}$, with ϑ in quadrant II.

$(15)^2 + (-8)^2 = r^2$

$225 + 64 = r^2$

$289 = r^2$

$r = 17$

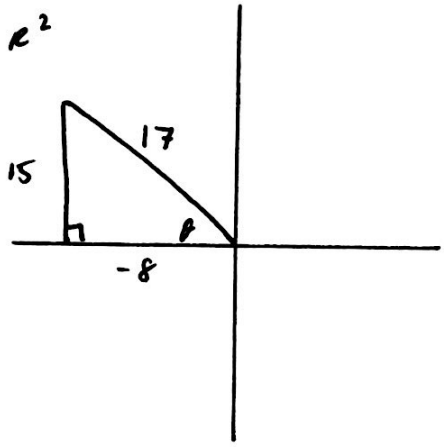

$sin\vartheta =$ $15/17$ $\quad$ $csc\vartheta =$ $17/15$

$cos\vartheta =$ $-8/17$ $\quad$ $sec\vartheta =$ $-17/8$

$tan\vartheta =$ $15/-8$ $\quad$ $cot\vartheta =$ $-8/15$

9.) $\cos\vartheta = -\frac{4}{5}$, with ϑ in quadrant III.

$(-4)^2 + y^2 = (5)^2$

$16 + y^2 = 25$

$y^2 = 9$

$y = \pm 3$

$y = -3$

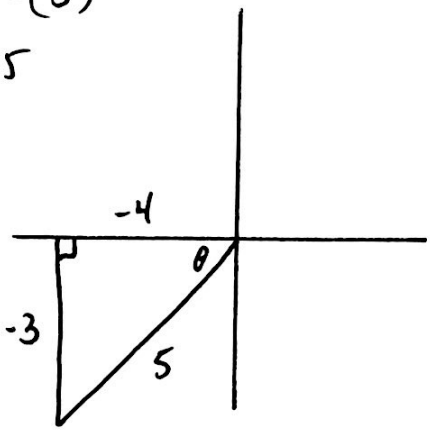

$sin\vartheta =$ $-3/5$ $\quad$ $csc\vartheta =$ $-5/3$

$cos\vartheta =$ $-4/5$ $\quad$ $sec\vartheta =$ $-5/4$

$tan\vartheta =$ $3/4$ $\quad$ $cot\vartheta =$ $4/3$